Performance Line

Commercial Side-Folding Grille

PRODUCT SPECIFICATIONS

Grille Security for Open Spaces

ROBUST PROTECTION

Secure, protective barrier against theft and intrusion.

FLEXIBLE DURABILITY

Twin roller support with flexible lock, curve and finish options to meet security and aesthetic needs.

STYLE DELIVERED

Seven (7) primary and 8 total infill styles to maximize security, visibility, and airflow.

QMi® Security Innovations

Features Summary

CURTAIN

- Performance Line curtain constructed of panel modules linked together by continuous aluminum hinges (6.5 in. typ on center)
- Top, bottom, and other horizontal members extruded aluminum 6063-T-6
- Specific curtain makeup depends on style
- Maximum height of 14 ft.

TRACKS AND HINGES

- Curtain hung from overhead track 1-3/8 in. (W) x 1-3/4 in. (H)
- Full height hinges for durability and strength
- Track and hinges 6063-T6 extended aluminum
- Cold-rolled steel hanger rods (5/16 diameter) provide durability

LOCKS

- Top and bottom lock posts, with drop bolts into floor or counter and header (at top)
- Free floating Intermediate posts located at all curves at recommended intervals of 10 ft. (floor) and 5 ft. (counter)
- IC lock cylinders (Medeco, Best, others) ILCO keyed-alike cylinders, or thumb turn factory fitted

STACKING

- Stacking for Performance Line is approximately 2 in. per linear ft. of grille

WARRANTY*

TWO PARTS YEARS

TWO FINISH YEARS

Options Summary

STYLES

- Seven (7) primary and 8 overall styles available; select specifications include:
  - Q-Air: 14-gauge steel, with 3/16 in. diameter holes at 1/4 in. OC
  - Q-Clear: Polycarbonate panels 0.08 in. thickness optimized for clarity
  - Q-Solid: Extruded 6063-T6 aluminum panels

ADDITIONAL LOCKS

- Seven (7) different lock posts to meet application requirements

CURVES

- 14 and 24 in. radius curves in 45° and 90° options
- Custom curves/radius available

COLOR AND FINISH

- Clear (Silver) and Black Anodize (Type II, Class 2, 10µm)
- White (SH-Series Powder coat per AAMA 2603-13, DFT 60-110 µm)
- Custom in powder (above) or wet paint (H/S polyester 221T2602 DuraCoat wet paint, DFT 24-28 µm)

*Applies to Commercial applications only and customers who follow Use and Care Guidelines

System Details (Styles)

Performance Line

Q-Clear
(6.5 in.)

Q-Air
(6.5 in.)

Q-Solid
(6.5 in.)

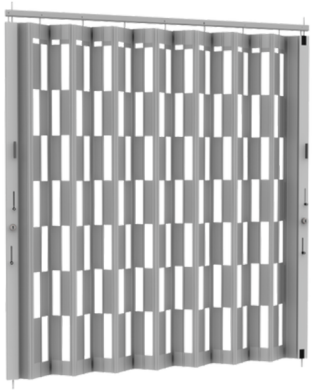

Q-Check
(6.5 in.)

Q-Guard (Linear)
(6.5 in.)

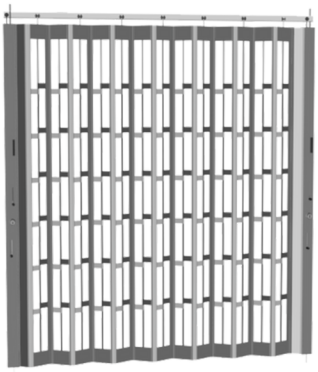

Q-Guard (Offset)
(6.5 in.)

Q-Guard (Staggered)
(6.5 in.)

STYLE DETAILS

- Seven (7) primary styles, with 8 total
- Q-Check available in 9 and 12 in. vertical pattern, open only
- All Q-Guard available in open only

System Details (Curtain, Ref)

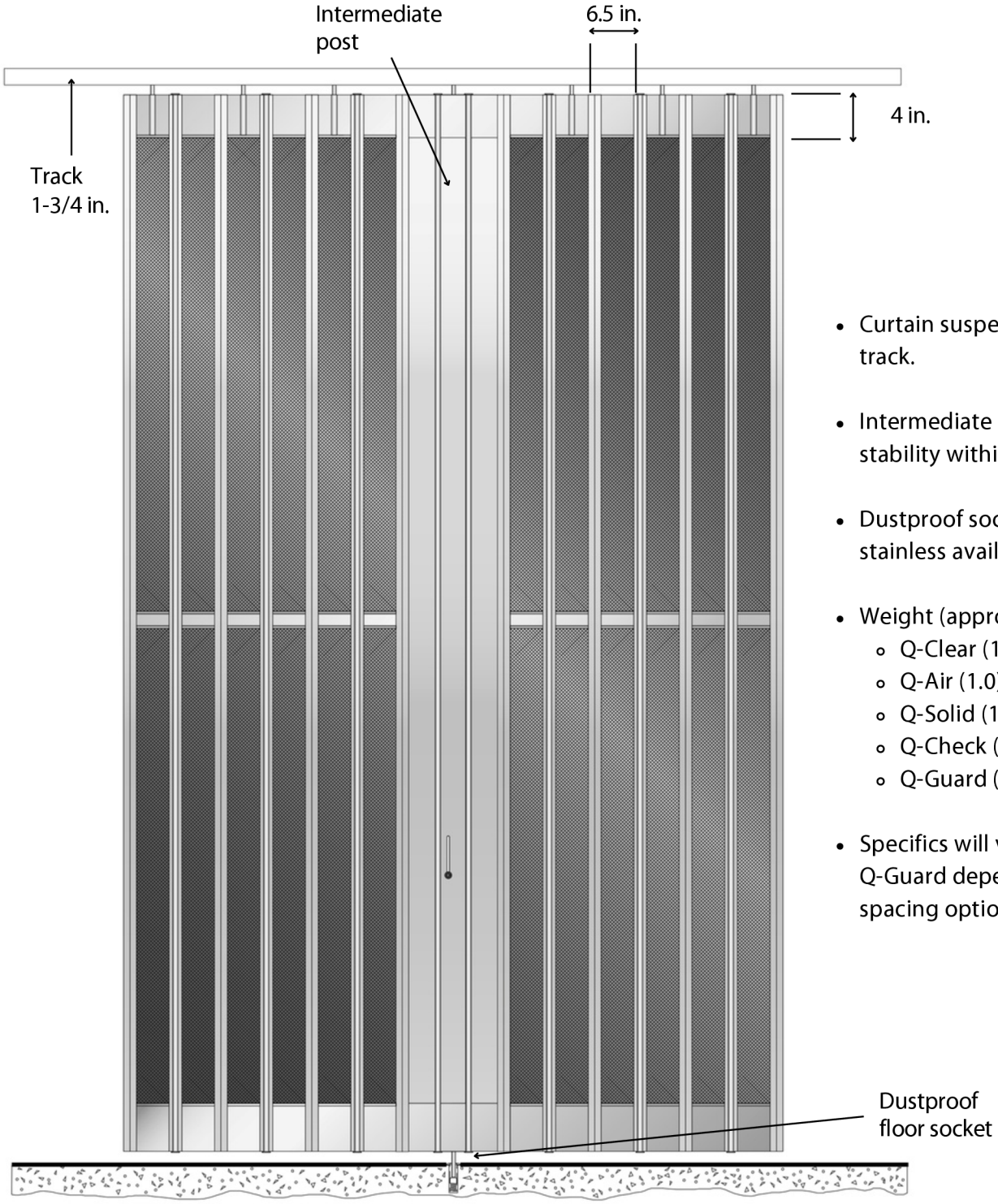

- Curtain suspended from 1-3/4 in. track.
- Intermediate posts provide locking stability within curtain.
- Dustproof sockets for floors, stainless available for counter.
- Weight (approximate lbs. per sq. ft.)
  - Q-Clear (1.2)
  - Q-Air (1.0)
  - Q-Solid (1.6)
  - Q-Check (open, ref) (1.8)
  - Q-Guard (open, ref) (1.5)
- Specifics will vary for Q-Check and Q-Guard depending on vertical spacing option chosen.

System Details (Section, Pocket, and Track)

Section Panel

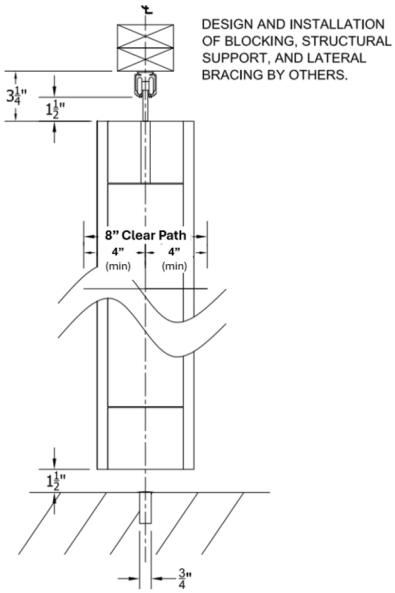

- 8 in. minimum clear path required
- Design and installation of blocking, structural support, and lateral bracing by others

Pocket

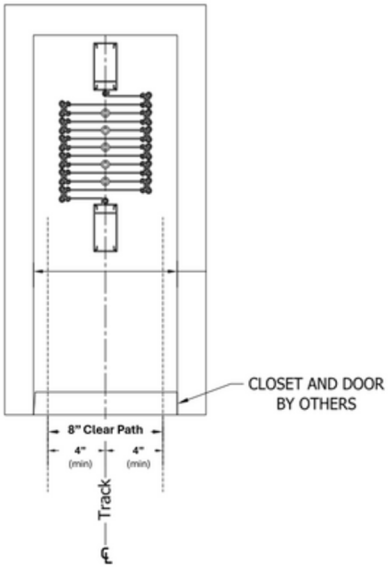

- Reference stacking for Performance Line is 2 in. per linear ft. of grille
- Curves into pocket may vary the minimum pocket width required
- Closet and door by others

Track

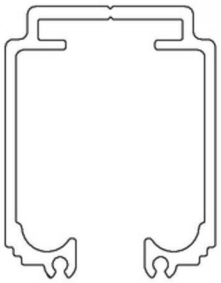

(1-3/8 in. (W) x 1-3/4 in. (H))

- Extruded aluminum track strong but lightweight
- Track not pre-drilled for field

Option Details (Posts and Layouts)

Posts

WALL STRIKE (1)

Securely attach your grille to a wall strike, ensuring it is firmly anchored to the wall. (2x backing by others required) Use the top cylinder to engage the hook lock between the lead post and the wall strike. For added security, utilize manual, spring-loaded knobs with a lower cylinder release for shoot bolting to the floor and track.

END POST (2)

Enjoy the benefit of manual, spring-loaded knobs with cylinder release for shoot-bolting directly to both the floor and track.

MIDDLE POST (3)

Used in middle of a span, they ensure stability in extended grille setups with manual, spring-loaded knobs and cylinder release for secure shoot bolting directly to the floor.

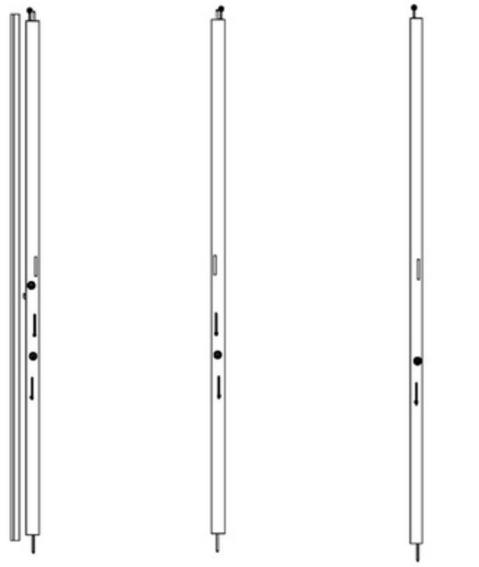

Wall Strike (1) | End Post (2) | Middle Post (3)

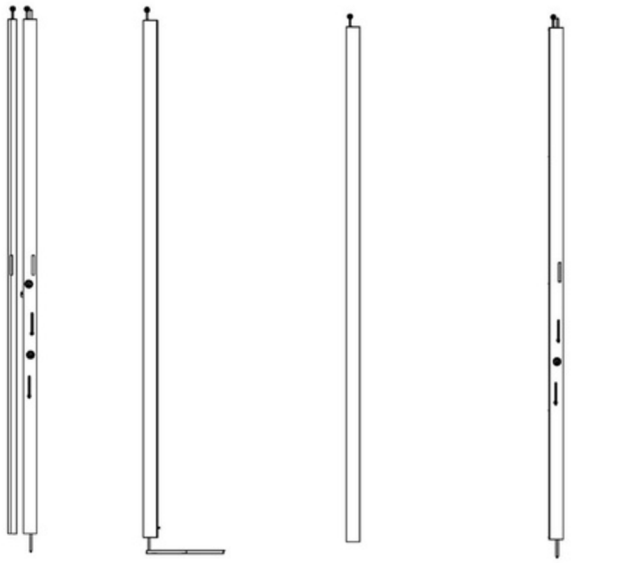

Bi-Part (4) | Pocket Retained (5) | Fixed End Post (6) | Floating End Post (7)

BI-PART (4)

Securely latches grille sections at the middle connection location using a top cylinder to operate the hook lock. Manual, spring-loaded knobs with a lower cylinder release enable secure shoot bolting to both the floor and track.

POCKET RETAINED POST (5)

Requires no locks and stops efficiently at both the floor and track within the closet.

FIXED END POST (6)

Even without locks, the Fixed End Post ensures your grille's end remains firmly anchored to the wall. (2x backing by others required)

FLOATING END POST (7)

Secure bolting anywhere along curtain. Combines a sleek design with practicality, using manual, spring-loaded knobs and a cylinder release for secure bolting to the floor and track on the secured side while remaining discreet on the public side.

Option Details (Post and Layouts Continued)

Standard Bends

- 45° and 90° bends standard
- 14 or 24 in. radius standard
- Custom shapes available (lead time)

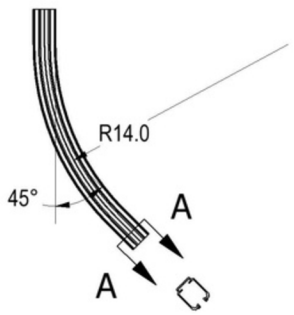

45° - 14 in.

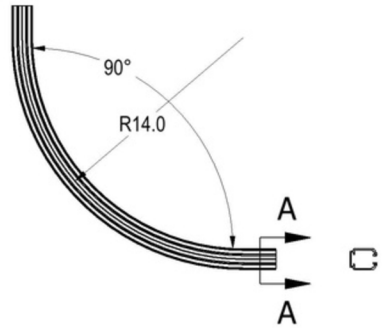

90° - 14 in.

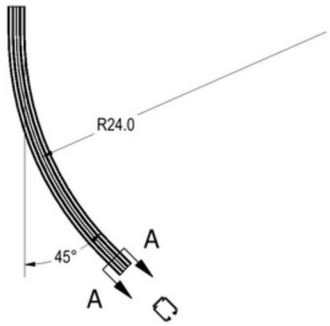

45° - 24 in.

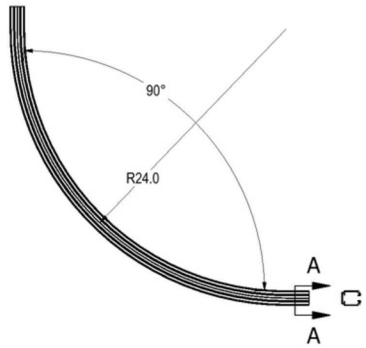

90° - 24 in.

Sample Layouts

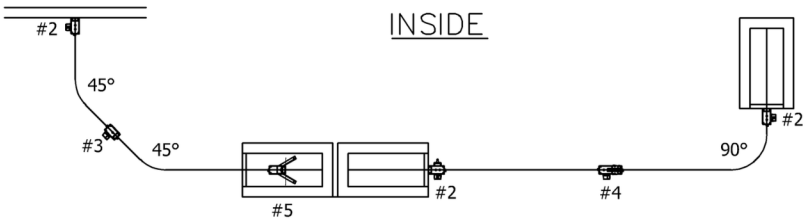

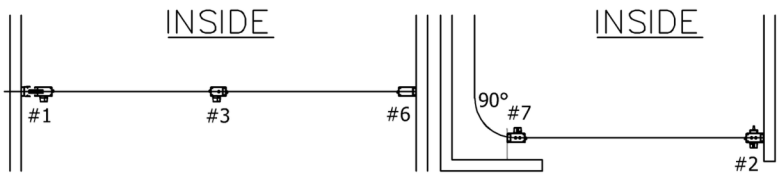

- All post configurations can be used throughout curtain depending upon applications need
- Contact QMi Application Engineering for questions

System Options (Colors)

Colors and Finish

Clear Anodized (Silver) | Black Anodized | White | Custom

Powder coat and wet paint options for both standard and custom colors are available.
Contact your QMi Sales or Project Support Representative for pricing and lead times on custom color options.

Mounting Details

Threaded Rod

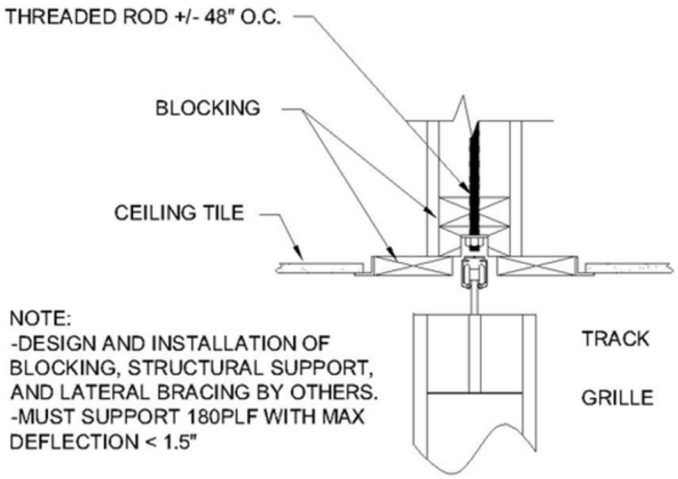

System designed for above ceiling installation with blocking and a threaded rod

Above Ceiling (Flush)

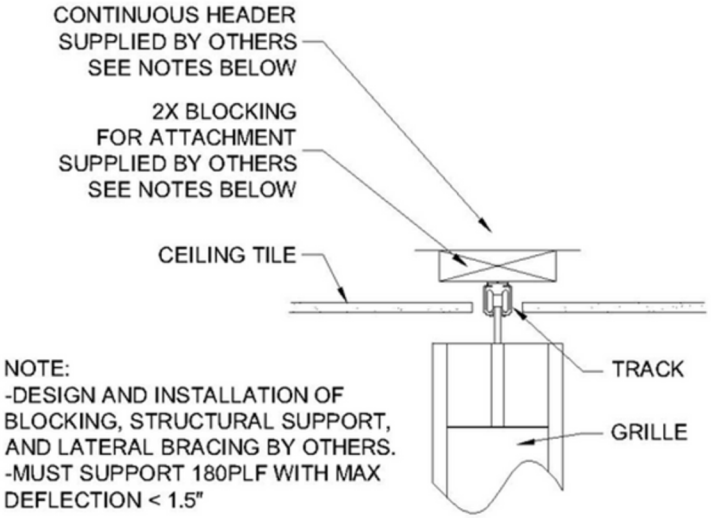

System can be flush mounted to existing or provided blocking, flush to ceiling

Above Ceiling (Proud)

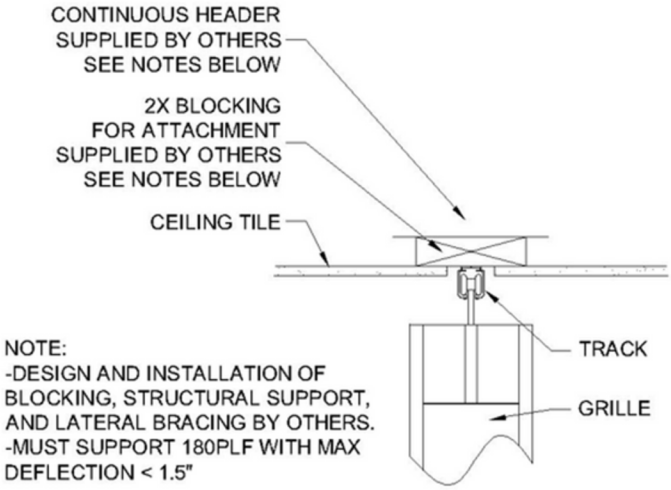

System can be mounted to existing or provided blocking, proud to ceiling

Wide range of mounting options available, Contact QMi Applications Engineering for more details.